IP Addressing II

Course Code: CSC 3116 Course Title: Computer Networks

Dept. of Computer Science
Faculty of Science and Technology

Lecturer No:	Lab 2	**Week No:**	2	**Semester:**	Summer 22-23
Lecturer:	*Sharifa Rania Mahmud; rania@aiub.edu*				

Lecture Outline

- Classful Address
- Network and Host Address
- Broadcast

Classful Addressing

- Address
  1. Class A
  2. Class B
  3. Class C
  4. Class D
  5. Class E

Recognizing Class

	Octet 1	Octet 2	Octet 3	Octet 4
Class A	0.....			
Class B	10.....			
Class C	110.....			
Class D	1110....			
Class E	1111....			

Binary notation

	Byte 1	Byte 2	Byte 3	Byte 4
Class A	0–127			
Class B	128–191			
Class C	192–223			
Class D	224–239			
Class E	240–255			

Dotted-decimal notation

Recognizing Class (cont….)

Class	Address Number Range	Starting Bits	Length of Network ID	Number of Networks	Hosts
A	1–126.*x.y.z*	0	8	126	16,777,214
B	128–191.*x.y.z*	10	16	16,384	65,534
C	192–223.*x.y.z*	110	24	2,097,152	254

Network address and Host address (cont….)

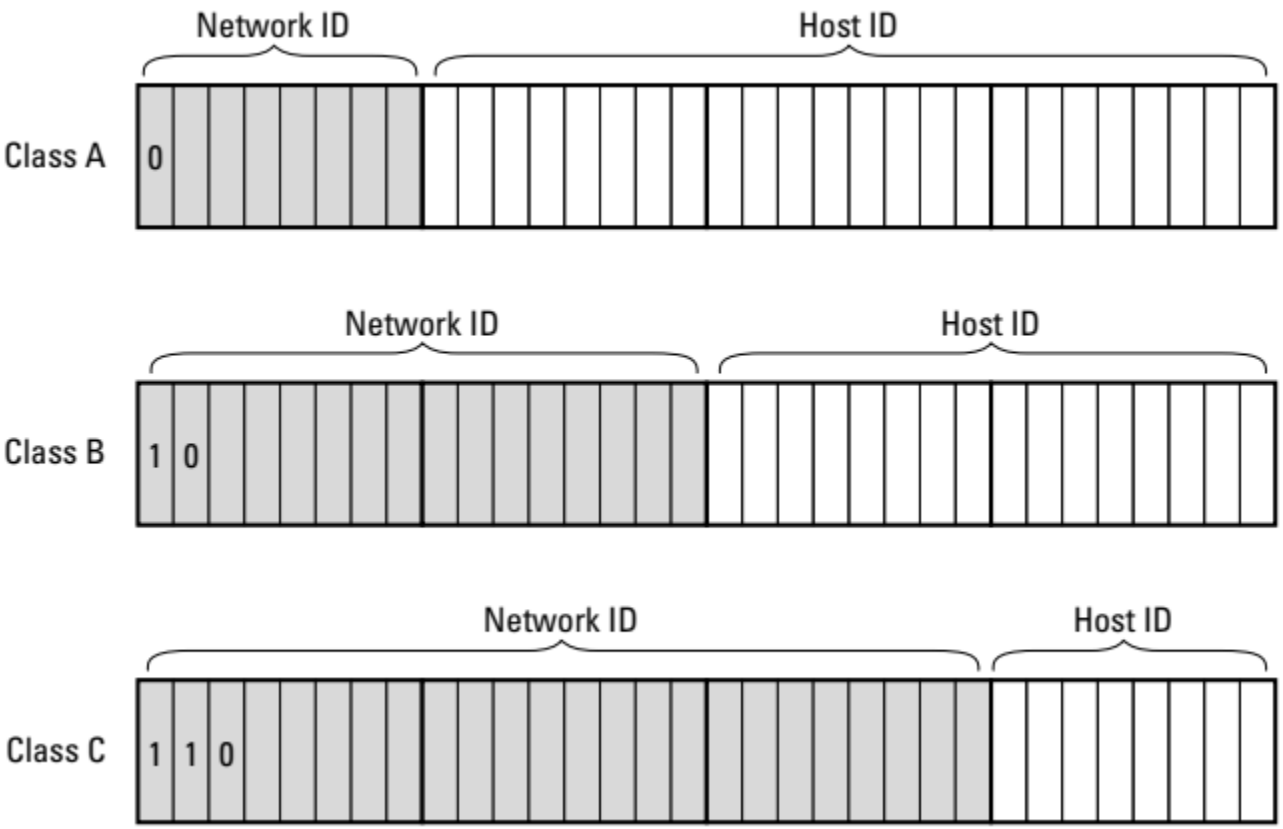

Network ID length: 8 bits
Host ID length: 24 bits

Network ID length: 16 bits
Host ID length: 16 bits

Network ID length: 24 bits
Host ID length: 8 bits

Address Space

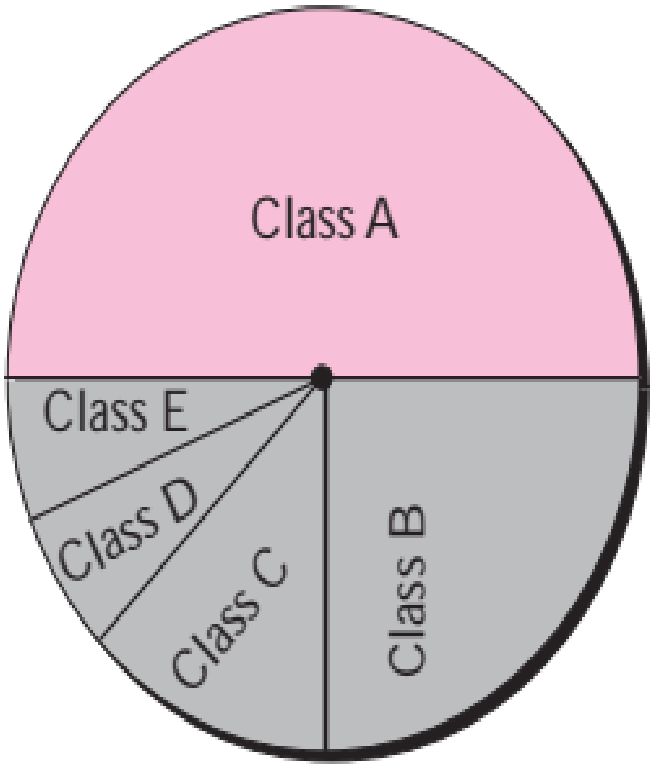

Class A: 2^{31} = 2,147,483,648 addresses, 50%

Class B: 2^{30} = 1,073,741,824 addresses, 25%

Class C: 2^{29} = 536,870,912 addresses, 12.5%

Class D: 2^{28} = 268,435,456 addresses, 6.25%

Class E: 2^{28} = 268,435,456 addresses, 6.25%

Address Space (cont….)

Problem

Find the class of each address:

a. 00000001 00001011 00001011 11101111

b. 11000001 10000011 00011011 11111111

Solution

a. The first bit is 0. This is a class A address.

b. The first 2 bits are 1; the third bit is 0. This is a class C address.

Address Space (cont….)

Find the class of each address:

a. 227.12.14.87
b. 193.14.56.22
c. 14.23.120.8
d. 252.5.15.111

Solution

a. The first byte is 227 (between 224 and 239); the class is D.
b. The first byte is 193 (between 192 and 223); the class is C.
c. The first byte is 14 (between 0 and 127); the class is A.
d. The first byte is 252 (between 240 and 255); the class is E.

Few of the special purpose IP addresses

IP address	Purpose
0.0.0.0	For several reasons*
10.0.0.0 to 10.255.255.255, 8-bits mask	Private IP address
172.16.0.0 to 172.31.255.255, 12-bits mask	Private IP address
192.168.0.0 to 192.168.255.255, 16-bits mask	Private IP address
255.255.255.255	Limited Broadcast IP address
127.0.0.0	Loopback address

- Automatically temporarily assigned to host for DHCP discovery
- If a host has two IP addresses, 192.168.1.1 and 10.1.2.1, and a server running on the host is configured to listen on 0.0.0.0, it will be reachable at both of those IP addresses.

Network address and Host address

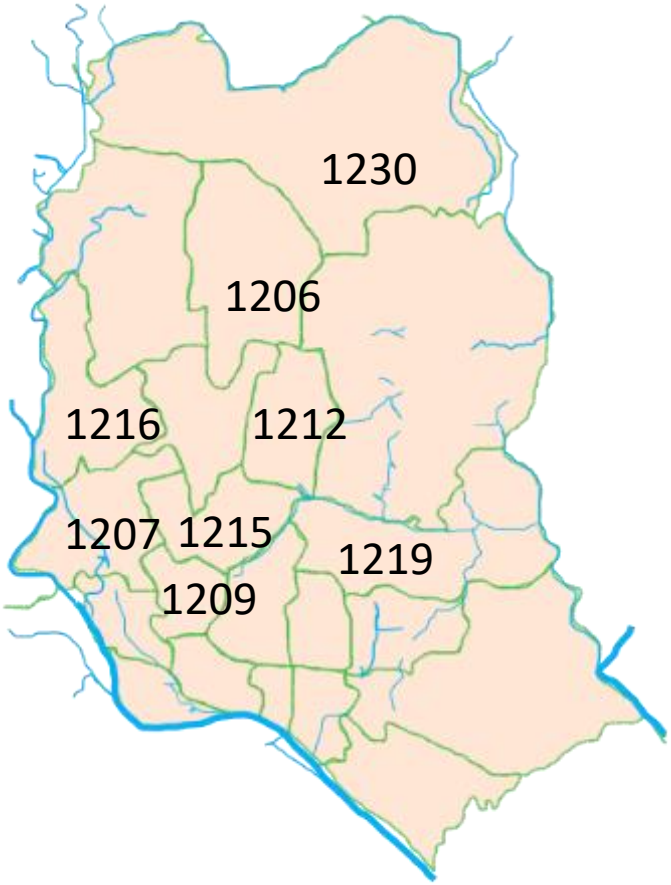

Network address and Host address (cont….)

- **The network ID (or network address)**
  - Identifies the network on which a host computer can be found
- **The host ID (or host address)**
  - Identifies a specific device on the network indicated by the network ID

Analogy:

- **network address------>Postcode of an area**
- **Host address---------> House number of a person in that area**

Network address and Host address (cont….)

- No. of Networks= $2^{No.of\ bits\ in\ the\ network\ ID}$
- No. of hosts= $2^{No.of\ bits\ in\ the\ host\ ID}$-2

Extracting Information in a Block

How many addresses are there in a block?
What is the first address?
What is the last address?

1. The number of addresses in the block, N, can be found using $N = 2^{32-n}$.
2. To find the first address, we keep the n leftmost bits and set the $(32 - n)$ rightmost bits all to 0s.
3. To find the last address, we keep the n leftmost bits and set the $(32 - n)$ rightmost bits all to 1s.

Broadcast

- Broadcast[1]
  - Sending packet to all hosts of a network
  - Limited Broadcast
    - When a host of a network sends packet to all hosts of the same network
    - Sends packet to 255.255.255.255 IP address
  - Direct Broadcast
    - When a host of a network sends packet to all hosts of another network.
    - If the network address of the target network is 20.0.0., the packet is sent to 20.255.255.255

1 E. Conrad, S. Misenar and J. Feldman, *CISSP Study Guide*, 3rd ed., Elsevier Inc., 2016

Broadcast (cont….)

- A network has three kinds of IP addresses
  - Network IP address
    - Lowest IP address of the network
  - Broadcast IP address
    - Highest IP address of the network
  - Host IP addresses
    - All IP addresses of the network except the lowest and highest IP address

Broadcast (cont….)

- How to get network IP address and broadcast IP address?
  - Network IP address: Replace all host bits by zeroes (0) of any IP address of the network
  - Broadcast IP address: Replace all host bits by ones of any IP address of the network

Broadcast (cont….)

What is the network and broadcast IP addresses of the network which uses 192.100.12.110 as a host address?

- 192.100.12.110 is a class C address
- 192.100.12 is the network part and 110 is the host part
- Network IP address: 192.100.12.0
- Broadcast IP address: 192.100.12.255

No. of usable host IP address: No. of addresses-2

Broadcast (cont….)

Example

An address in a block is given as 73.22.17.25. Find the number of addresses in the block, the first address, and the last address.

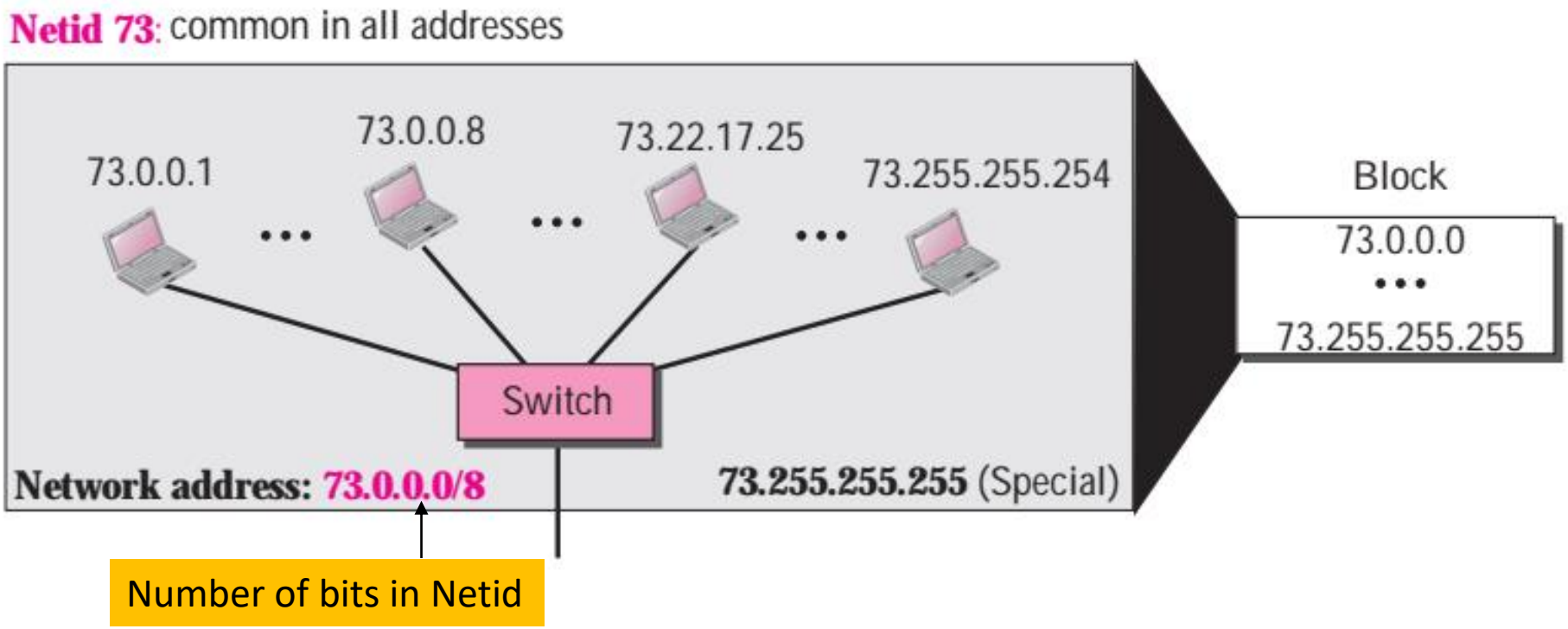

Interconnections of multiple networks

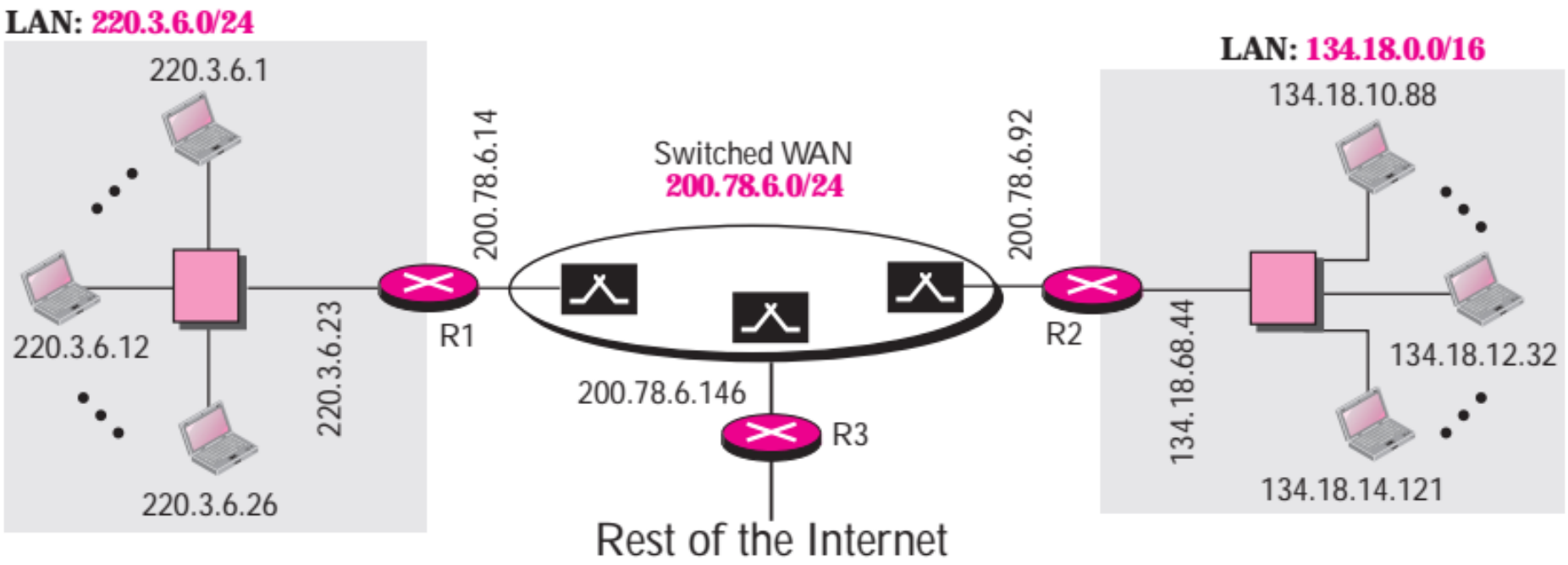

Network Mask/Subnet Mask

A **network mask** or a **default mask** in classful addressing is a 32-bit number with *n* leftmost bits all set to 1s and (32 - *n*) rightmost bits all set to 0s

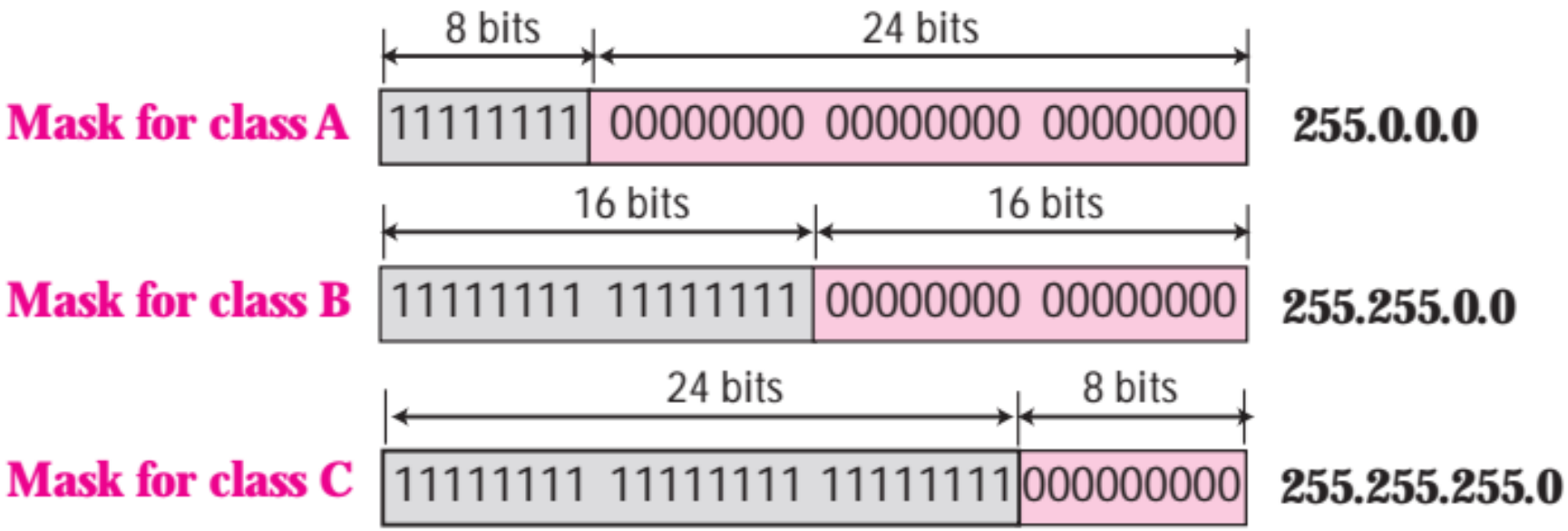

Network Mask/Subnet Mask

Class	n	k	No. of Networks (Blocks) 2^{n-k}	No. of Host in each Network 2^{32-n}
Class A	8	1	128	16,777,216
Class B	16	2	16,384	65,536
Class C	24	3	2,097,152	256

Huge wastage of IP addresses

Wastage of IP addresses

No enough for all organizations

References

1. Official Cert Guide CCNA 200-301 , vol. 1, *W. Odom*, Cisco Press, First Edition, 2019, USA.

2. CCNA Routing and Switching, *T. Lammle*, John Wily & Sons, Second Edition, 2016, USA.

3. Cisco IOS Configuration Fundamentals Command Reference. http://www.cisco.com

Books

1. Official Cert Guide CCNA 200-301 , vol. 1, *W. Odom*, Cisco Press, First Edition, 2019, USA.

2. CCNA Routing and Switching, *T. Lammle*, John Wily & Sons, Second Edition, 2016, USA.